sfs-fluidsysteme.com

PNEUMATIC SOLUTIONS

Pressure regulators

Version: 10/2021

Mini pressure reducer

type MDR0 and MDRS0, size M5

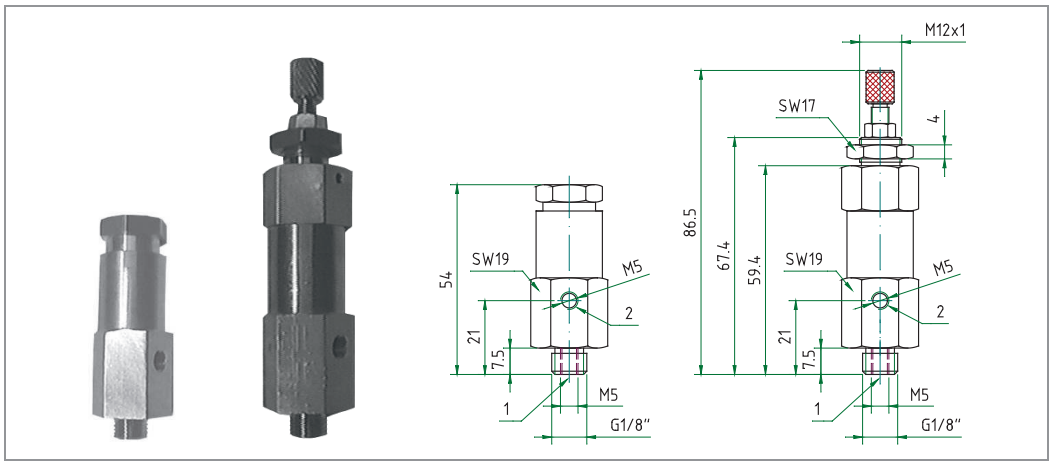

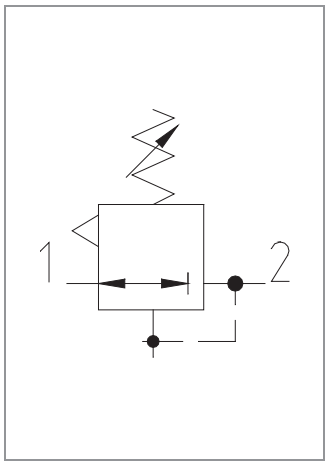

SPECIFACTION	
general	
construction	piston type with secondary exhaust
connection	inlet M5 and G1/8", outlet M5, gauge port M5
ambient temperature	-20°C to +60°C
fluid temperature	-20°C to +80°C
material	metal parts: brass (Ms58) seals: perbunan (NBR) springs: stainless steel and steel zinc plated
mounting	type MDRS0 also panel mounting
installation position	in any position
supply item	type MDRS0 incl. nut for panel mounting
fluid	neutral gazes, filtered, lubricated or non lubricated compressed air
inlet pressure	max. 12 bar
outlet pressure	adjustable from 1 to 8 bar
nominal flow	100 Nl/min (inlet pressure 10 bar, outlet pressure 6 bar and a pressure drop of 1 bar)
nominal diameter	DN 2.2 mm
special solution (on request)	seals in FPM solution without secondary exhaust

type	article-nr.	outlet pressure (bar)	seal material	weight (approx. g)
MDR0	**90 000 041**	1 bis 8	NBR	80
MDR0V	**90 000 042**	1 bis 8	FPM	80
MDRS0	**90 000 043**	1 bis 8	NBR	110
MDRS0V	**90 000 044**	1 bis 8	FPM	110

E & OE: We reserve the right to change design, dimensions or materials without notice.

Mini pressure reducer

type MR1.-.

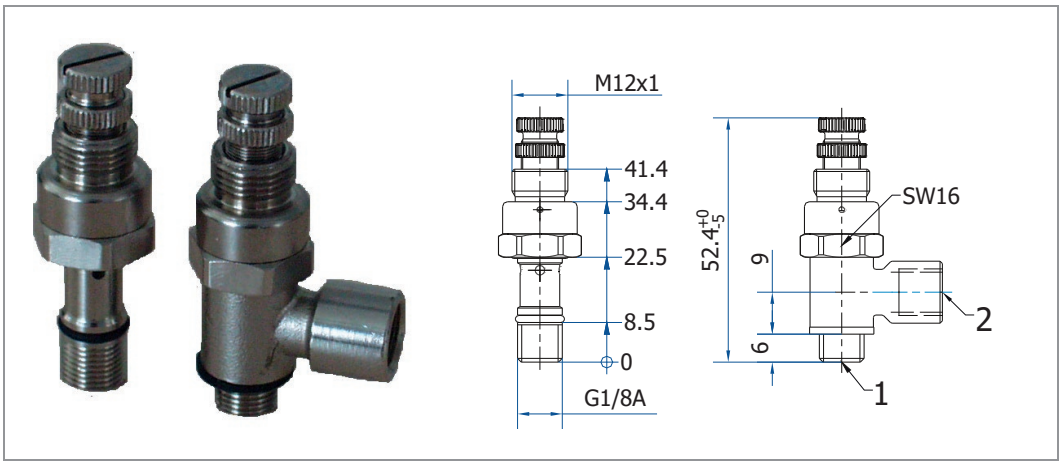

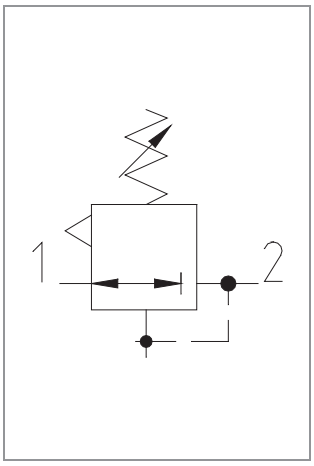

SPECIFICATION	
general	
construction	piston type with secondary exhaust
connection	port 1 (pressure inlet) G1/8'' A according to ISO 228 port 2 (outlet) G1/8'' according to ISO 228 respective push in raccord for plastic tubes
ambient temperature	-20°C to +60°C
fluid temperature	-20°C to +80°C
material	metal parts: brass nickel plated seals: Perbunan (NBR) springs: stainless steel washer : polyamide
mounting	
installation position	any position, ring piece turntable 360° before the valve is tightened
items supplied	
fluid	neutral gazes, filtered, lubricated or non lubricated compressed air, filter 50 micron
inlet pressure	type MR1.-2 max. 6 bar, type MR1.-8 max. 10 bar
outlet pressure	Type MR1.-2 0.5 – 2 bar, Type MR1.-8 1 – 8 bar
nominal flow	inlet pressure 8 bar, outlet pressure 6 bar and a pressure drop of 1 bar: 75 Nl/min
nominal diameter	DN 2.5 mm
special version (on request)	without secondary exhaust, for liquids

Type	article-nr.	outlet pressure (bar)	outlet (2)	weight (appr.) g
MR1X-2	**90 000 530**	0.5 – 2	hollow screw	28
MR1X-8	**90 000 531**	1 – 8	hollow screw	28
MR11-2	**90 000 532**	0.5 – 2	ring piece G1/8	45
MR11-8	**90 000 533**	1 – 8	ring piece G1/8	45
MR1A-2	**90 000 534**	0.5 – 2	ring piece ∅4	45
MR1A-8	**90 000 535**	1 – 8	ring piece ∅4	45
MR1C-2	**90 000 536**	0.5 – 2	ring piece ∅6	46
MR1C-8	**90 000 537**	1 – 8	ring piece ∅6	46

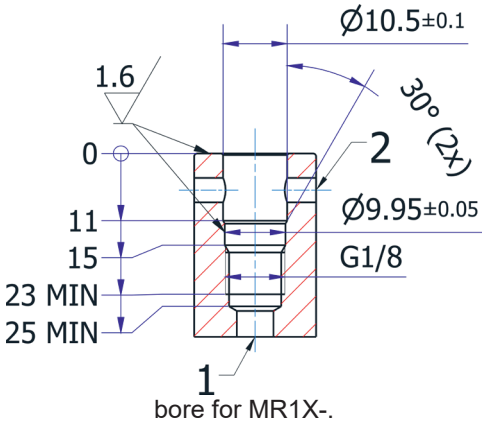

E & OE: We reserve the right to change design, dimensions or materials without notice.

Mini pressure reducer

type MR0-. , size M5, with secondary exhaust

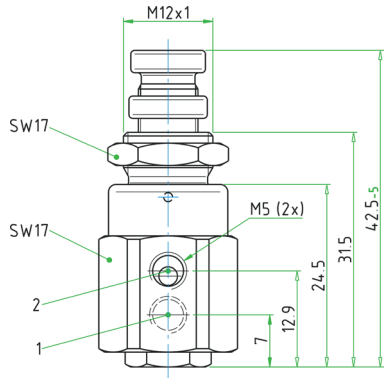

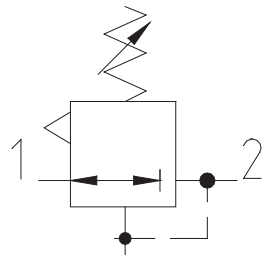

SPECIFICATION	
general	
construction	piston type with secondary exhaust
connection	thread M5
ambient temperature	-20°C to +60°C
fluid temperature	-20°C to +80°C
material	metal parts: brass (Ms58), nickel-plated seals: perbunan (NBR) springs: stainless steel nut: plastic
mounting	panel mounting nut
installation position	any position
items supplied	reducer and panel mounting nut
fluid	filtered (50 µm) neutral gases, lubricated or non lubricated compressed air
inlet pressure	max. 10 bar with MR0-8, max. 6 bar with MR0-2
outlet pressure	MR0-2: 0.2 – 2 bar, MR0-8: 1 – 8 bar
nominal flow	inlet pressure 8 bar, outlet pressure 6 bar and a pressure drop of 1 bar: 75 Nl/min
nominal diameter	DN 2.5 mm

type	article-nr.	outlet pressure (bar)	seal material	weight (approx. g)
MR0-2	**90 000 335**	0.2 – 2	NBR	45
MR0-8	**90 000 336**	1 – 8	NBR	45

E & OE: We reserve the right to change design, dimensions or materials without notice.

Mini pressure reducer

type MRW0. , size M5, without secondary exhaust

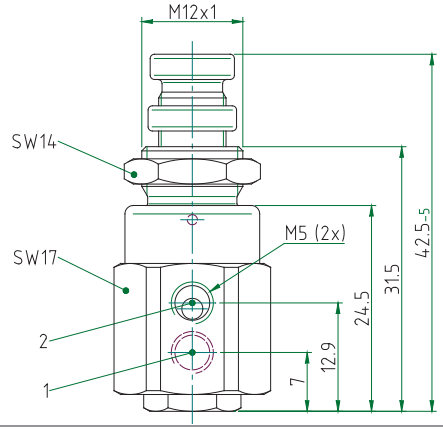

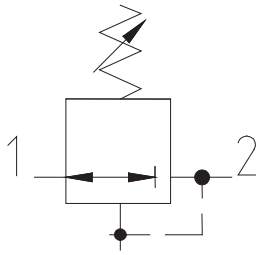

SPECIFICATION	
general	
construction	piston type without secondary exhaust
connection	thread M5
ambient temperature	-20°C to +60°C
fluid temperature	-20°C to +80°C
material	metal parts: brass (Ms58) nickel-plated seals: perbunan (NBR) springs: stainless steel nut: brass (Ms58) nickel-plated
mounting	panel mounting nut
installation position	any position
items supplied	reducer and panel mounting nut
fluid	filtered (100 µm), neutral gases and liquids
inlet pressure	max. 10 bar at MRW0-8, max. 6 bar at MRW0-2
outlet pressure	MRW0-2: 0.2 – 2 bar, MRW0-8: 1 – 8 bar
flow rate	k_{vs}-value: 0.093 m³/h (1,55 l/min) water
nominal diameter	DN 2.5 mm

type	article-nr.	outlet pressure (bar)	seal material	weight (approx. g)
MRW0-2	**90 000 366**	0.2 – 2	NBR	46
MRW0-8	**90 000 367**	1 – 8	NBR	46

E & OE: We reserve the right to change design, dimensions or materials without notice.

Mini pressure reducer

type MR2x-8

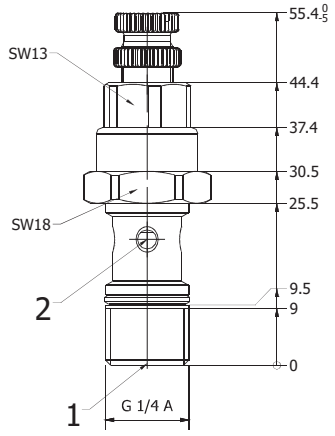

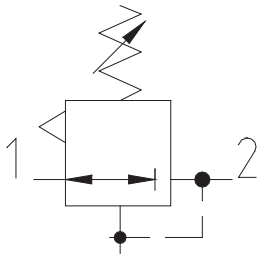

SPECIFICATION	
general	
construction	piston type with secondary exhaust
connection	port 1 (pressure inlet) G1/4A according to ISO 228 port 2 (outlet) ring piece or location hole
ambient temperature	-20°C to +60°C
fluid temperature	-20°C to +60°C
material	metal parts: brass nickel plated seals: NBR springs: stainless steel
mounting	line installation
installation position	any position, ring piece turntable 360° before the valve is tightened
items supplied	
fluid	neutral gazes, filtered, lubricated or non-lubricated compressed air, filter 50 micron
inlet pressure	type MR2X.-8 max. 10 bar
outlet pressure	type MR2X.-8 1 – 8 bar
nominal flow	inlet pressure 8 bar, outlet pressure 6 bar and a pressure drop of 1 bar: 92 Nl/min
nominal diameter	DN 2.5 mm

type	articel-nr.	outlet pressure (bar)	outlet (2)	weight (appr.) g
MR2X-8	**90 000 646**	1 – 8	hollow screw	44

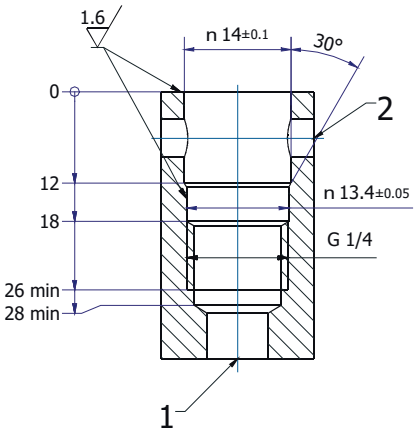

bore for MR2X-8

E & OE: We reserve the right to change design, dimensions or materials without notice.

Mini pressure reducer

type MR2x-8 (panel mounting)

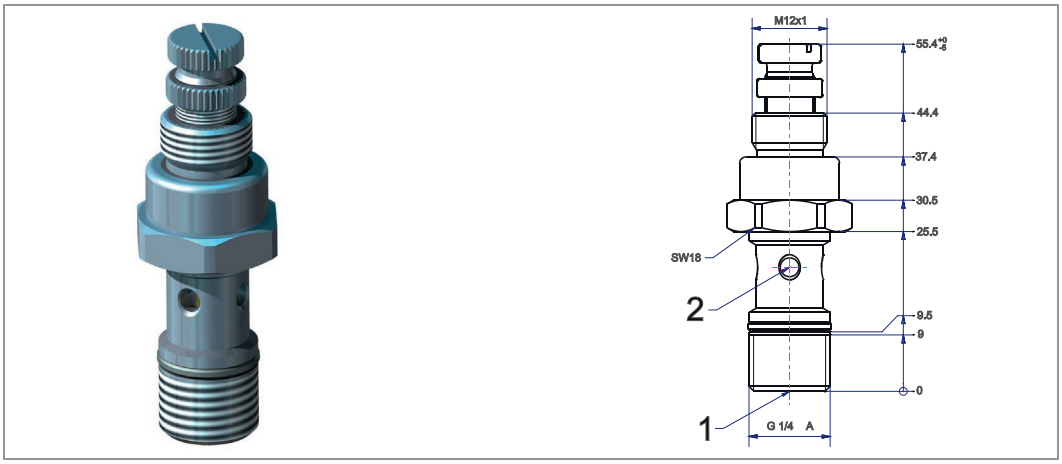

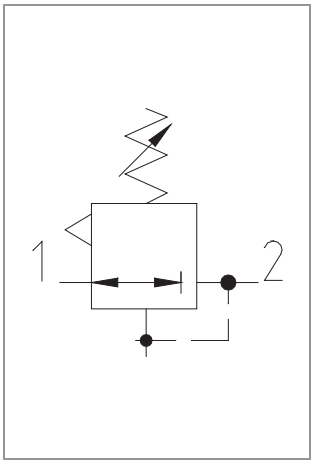

SPECIFICATION	
general	
construction	piston type with secondary exhaust
connection	port 1 (pressure inlet) G1/4A according to ISO 228 port 2 (outlet) ring piece or location hole
ambient temperature	-20°C to +60°C
fluid temperature	-20°C to +60°C
material	metal parts: brass nickel plated seals: NBR springs: stainless steel
mounting	line installation
installation position	any position, ring piece turntable 360° before the valve is tightened
items supplied	
fluid	neutral gazes, filtered, lubricated or non-lubricated compressed air, filter 50 micron
inlet pressure	type MR2X.-8 max. 10 bar
outlet pressure	type MR2X.-8 1 – 8 bar
nominal flow	inlet pressure 8 bar, outlet pressure 6 bar and a pressure drop of 1 bar: 92 Nl/min
nominal diameter	DN 2.5 mm

type	articel-nr.	outlet pressure (bar)	outlet (2)	weight (appr.) g
MR2X-8	**90 000 677**	1 – 8	hollow screw	44

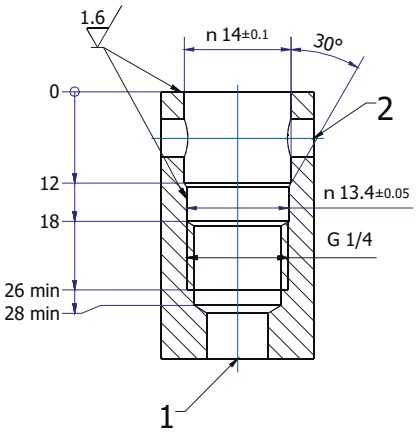

bore for MR2X-8

E & OE: We reserve the right to change design, dimensions or materials without notice.